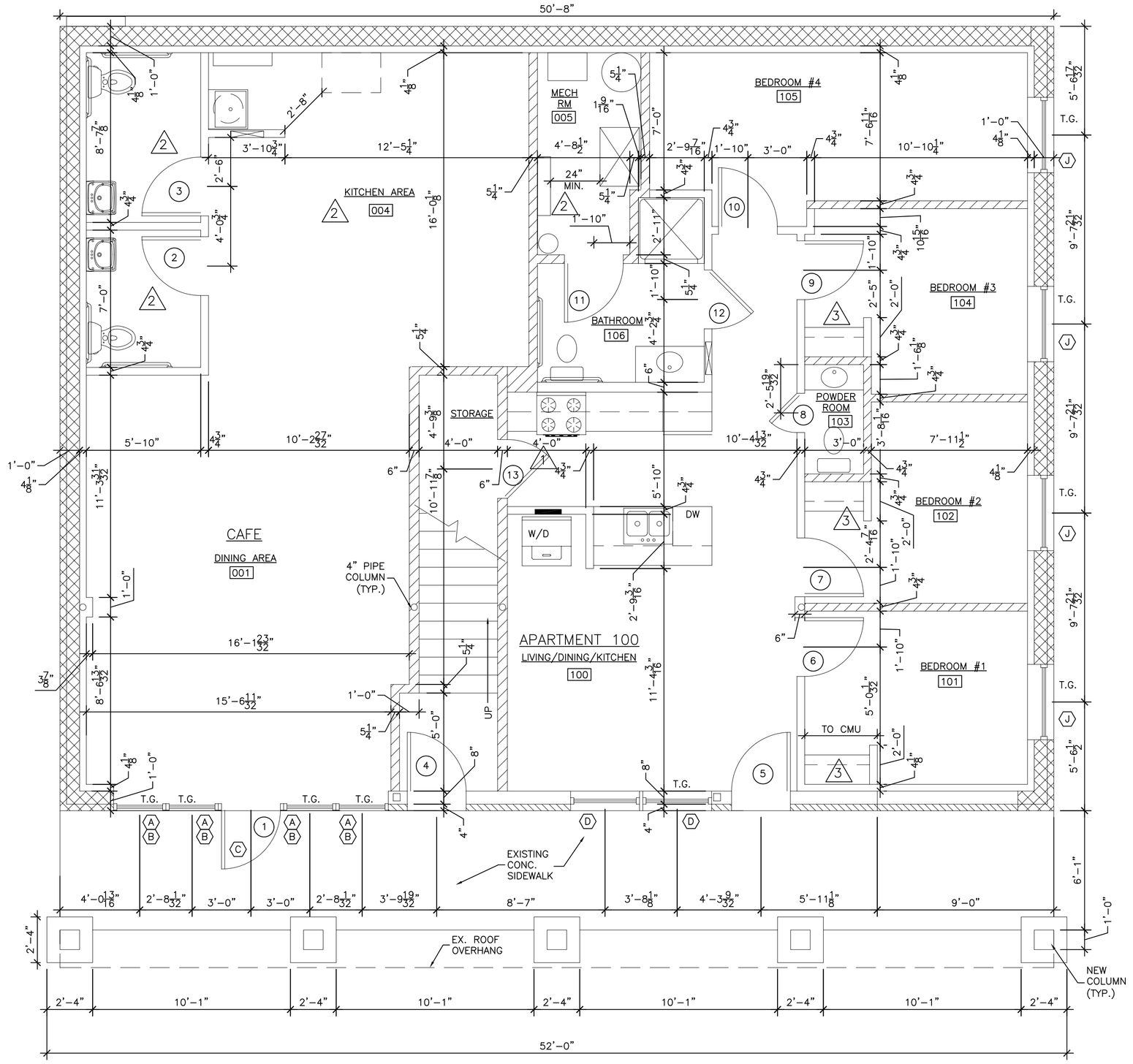

PROPOSED GROUND FLOOR PLAN

SCALE: 1/4" = 1'-0"

NOTE:
ALL WINDOWS IN APT. 100 SHALL BE INSTALLED @ 6'-8". THE CENTER RAIL WILL BE LOCATED WITHIN THE 48" ADA REACH RANGE.

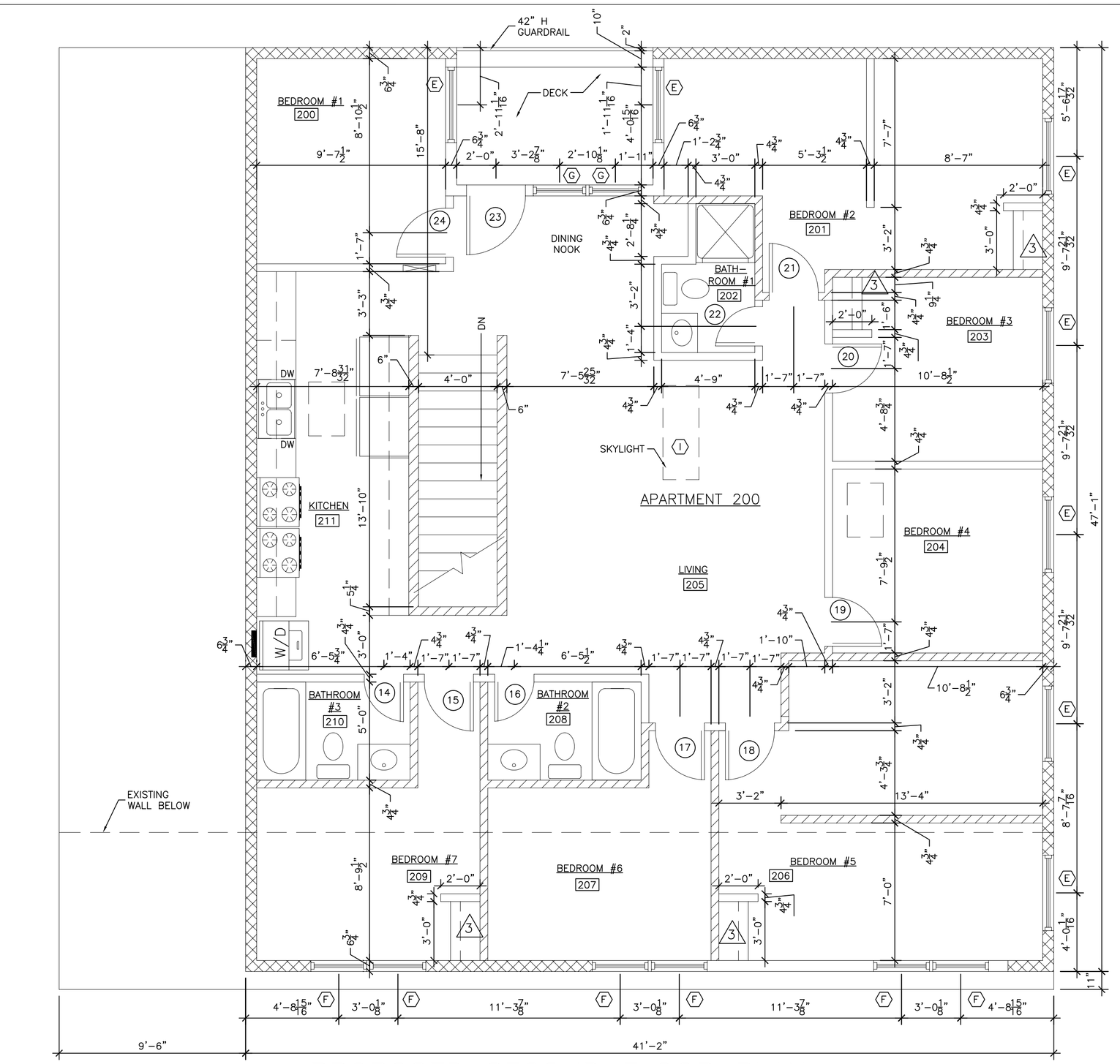

PROPOSED SECOND FLOOR PLAN

SCALE: 1/4" = 1'-0"

BUILDING NORTH

FINISH SCHEDULE

ROOM	AREA	FLOOR		NORTH WALL		SOUTH WALL		EAST WALL		WEST WALL		CEILING 1		REMARKS
		MATERIAL	BASE	MATERIAL	FINISH	MATERIAL	FINISH	MATERIAL	FINISH	MATERIAL	FINISH	MATERIAL	FINISH	
	CAFE													
001	DINING AREA	VY	VB	DW	PA	DW	PA	DW	PA	DW	PA	AT	@ 9' AFF	
002	WOMEN'S RESTROOM	VY	VB	DW/FRP	PA	DW/FRP	PA	DW/FRP	PA	DW/FRP	PA	AT	@ 9' AFF	6" H BASE
003	MEN'S RESTROOM	VY	VB	DW/FRP	PA	DW/FRP	PA	DW/FRP	PA	DW/FRP	PA	AT	@ 9' AFF	6" H BASE
004	KITCHEN	VY	VB	DW	PA	DW	PA	DW	PA	DW	PA	AT	@ 9' AFF	
005	MECHANICAL	VY	VB	DW	PA	DW	PA	DW	PA	DW	PA	DW	T&S	
	APARTMENT 100													
100	LIVING /KITCHEN/DINING	WL	WB	DW	PA	DW	PA	DW	PA	DW	PA	AT	@ 9' AFF	
101	BEDROOM #1	WL	WB	DW	PA	DW	PA	DW	PA	DW	PA	AT	@ 9' AFF	
102	BEDROOM #2	WL	WB	DW	PA	DW	PA	DW	PA	DW	PA	AT	@ 9' AFF	
103	POWDER ROOM	VY	VB	DW	PA	DW	PA	DW	PA	DW	PA	AT	@ 9' AFF	
104	BEDROOM #3	WL	WB	DW	PA	DW	PA	DW	PA	DW	PA	AT	@ 9' AFF	
105	BEDROOM #4	WL	WB	DW	PA	DW	PA	DW	PA	DW	PA	AT	@ 9' AFF	
106	BATHROOM	VY	VB	DW/MR	PA	DW/MR	PA	DW/MR	PA	DW/MR	PA	AT	@ 9' AFF	6" H BASE
	APARTMENT 200													
200	BEDROOM #1	WL	WB	DW	PA	DW	PA	DW	PA	DW	PA	DW	PA	
201	BEDROOM #2	WL	WB	DW	PA	DW	PA	DW	PA	DW	PA	DW	PA	
202	BATHROOM #1	VY	VB	DW/MR	PA	DW/MR	PA	DW/MR	PA	DW/MR	PA	DW	PA	6" H BASE
203	BEDROOM #3	WL	WB	DW	PA	DW	PA	DW	PA	DW	PA	DW	PA	
204	BEDROOM #4	WL	WB	DW	PA	DW	PA	DW	PA	DW	PA	DW	PA	
205	LIVING ROOM	WL	WB	DW	PA	DW	PA	DW	PA	DW	PA	DW	PA	
206	BEDROOM #5	WL	WB	DW	PA	DW	PA	DW	PA	DW	PA	DW	PA	
207	BEDROOM #6	WL	WB	DW	PA	DW	PA	DW	PA	DW	PA	DW	PA	
208	BATHROOM #2	VY	VB	DW/MR	PA	DW/MR	PA	DW/MR	PA	DW/MR	PA	DW	PA	6" H BASE
209	BEDROOM #7	WL	WB	DW	PA	DW	PA	DW	PA	DW	PA	DW	PA	
210	BATHROOM #3	VY	VB	DW/MR	PA	DW/MR	PA	DW/MR	PA	DW/MR	PA	DW	PA	6" H BASE
211	KITCHEN	WL	WB	DW	PA	DW	PA	DW	PA	DW	PA	DW	PA	

WINDOW SCHEDULE

TYPE	FRAME	WIDTH	HEIGHT	MANUFACTURE	REMARKS
A	ALUM.	2'-8 1/32"	6'-0"	KAWNEER	TEMPERED GLASS
B	ALUM.	2'-8 1/2"	0'-10"	KAWNEER	TEMPERED GLASS
C	ALUM.	3'-4"	0'-10"	KAWNEER	TEMPERED GLASS
D	WD/VINYL	3'-6 1/8"	4'-0 7/8"	ANDERSON	TEMPERED GLASS, AS REQUIRED
E	WD/VINYL	3'-10 1/8"	5'-4 7/8"	ANDERSON	
F	WD/VINYL	2'-10 1/8"	5'-4 7/8"	ANDERSON	
G	WD/VINYL	2'-8 1/8"	4'-8 7/8"	ANDERSON	TEMPERED GLASS
H	WD/VINYL	2'-10 1/8"	3'-4 7/8"	ANDERSON	
1 I	METAL/VINYL	2'-11 1/2" R.O.	3'-9 5/16" R.O.	VELUX	QFS 156
J	WD/VINYL	3'-10 1/8"	5'-4 7/8"	ANDERSON	MIN. BOTTOM TEMPERED GLASS

WINDOW TYPES

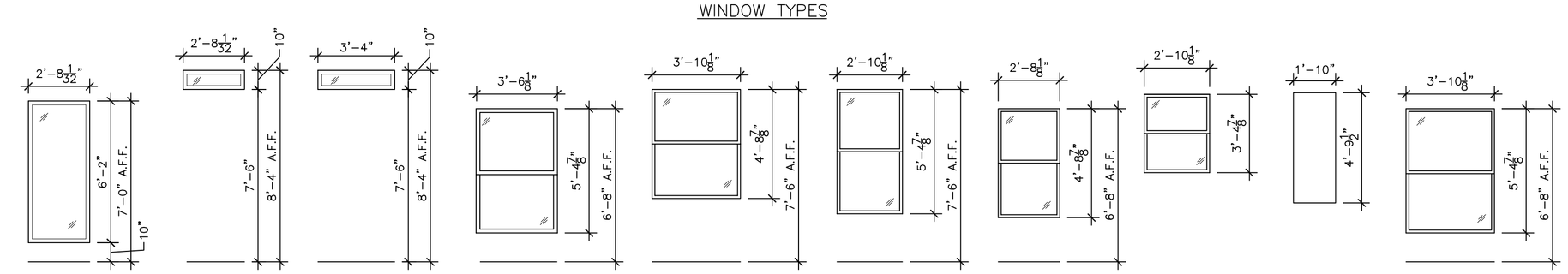

NOTE:
ALL WINDOWS IN APT. 100 SHALL BE INSTALLED @ 6'-8". THE CENTER RAIL WILL BE LOCATED WITHIN THE 48" ADA REACH RANGE.

ABBREVIATIONS

AT = ACOUSTICAL TILE
CA = CARPET
DW = DRYWALL
FRP = FIBERGLASS PANELS
MR = MOISTURE RESISTIVE
PA = PAINT
VB = VINYL BASE
VY = VINYL
WL = WOOD LAMINATE
WB = WOOD BASE

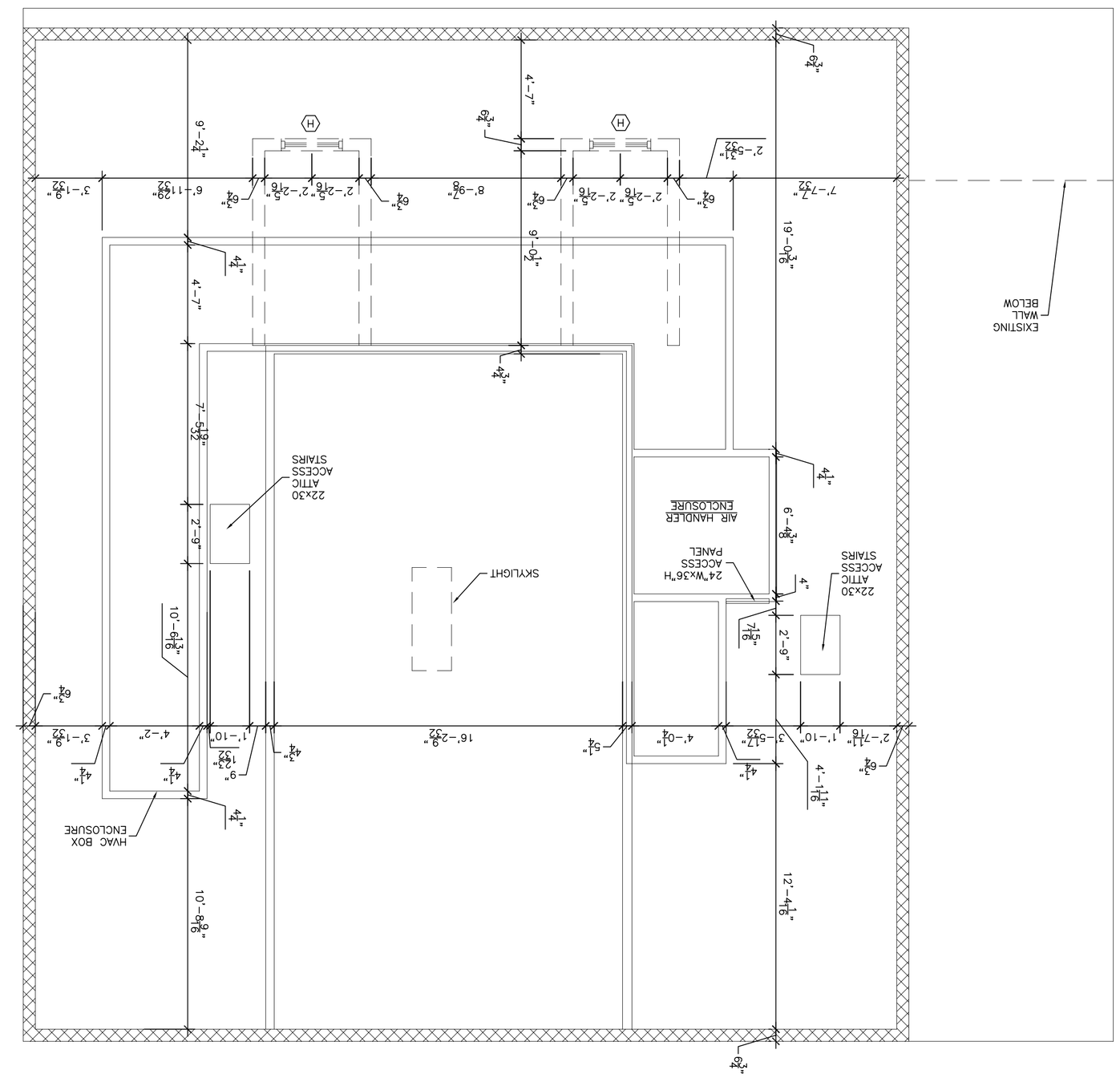
EXISTING WALL BELOW
19'-0 3/8"
7'-7 1/2"
2'-5 1/2"
2'-2 5/8"
2'-2 5/8"
8'-9 7/8"
2'-2 5/8"
2'-2 5/8"
6 3/4"
6 3/4"
6 3/4